WATERMAN SUPPLY COMPANY
MARINE & INDUSTRIAL EQUIPMENT

DOCK FITTINGS

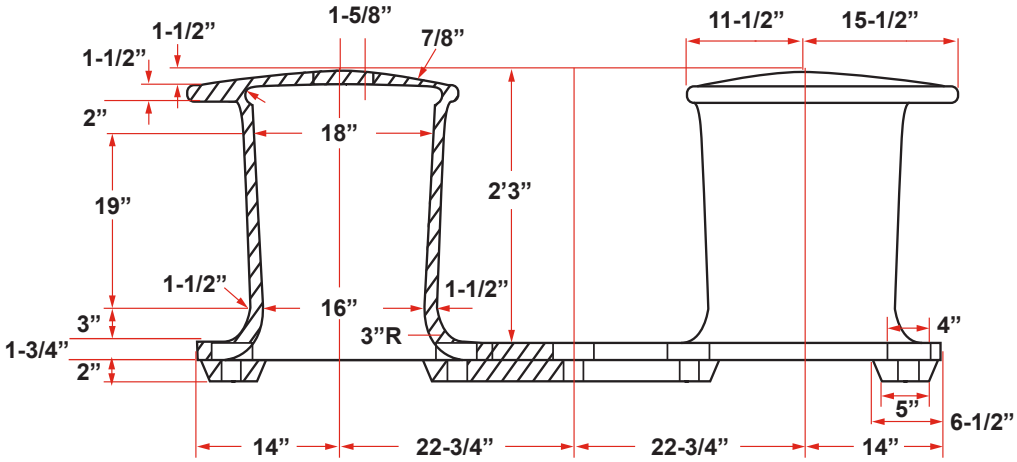

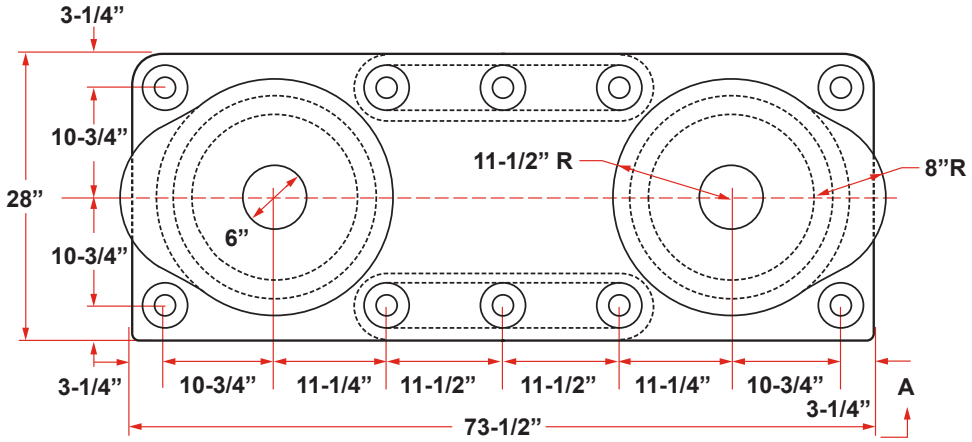

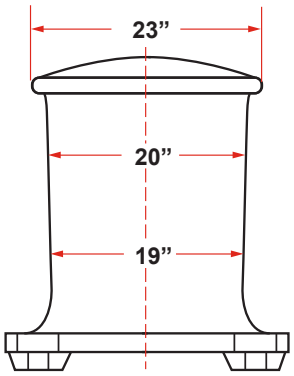

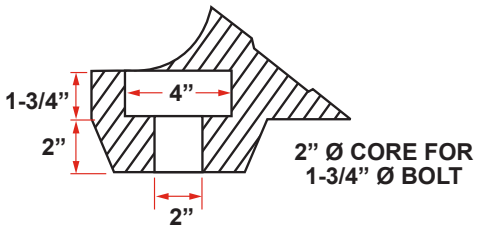

100 TON DOUBLE BITT
AMDB-100

WATERMAN SUPPLY COMPANY
MARINE & INDUSTRIAL EQUIPMENT

P. O. Box 596 (90748) • 910 Mahar Ave., Wilmington, CA 90744

(800) 322-3131 • (310) 522-9698 • Fax: (310) 522-1043
E-Mail: sales@watermansupply.com
www.watermansupply.com
TradeNet ID 61935