WATERMAN SUPPLY COMPANY
MARINE & INDUSTRIAL EQUIPMENT

BUOYS

58” SPHERICAL BUOY PAD EYES EACH END

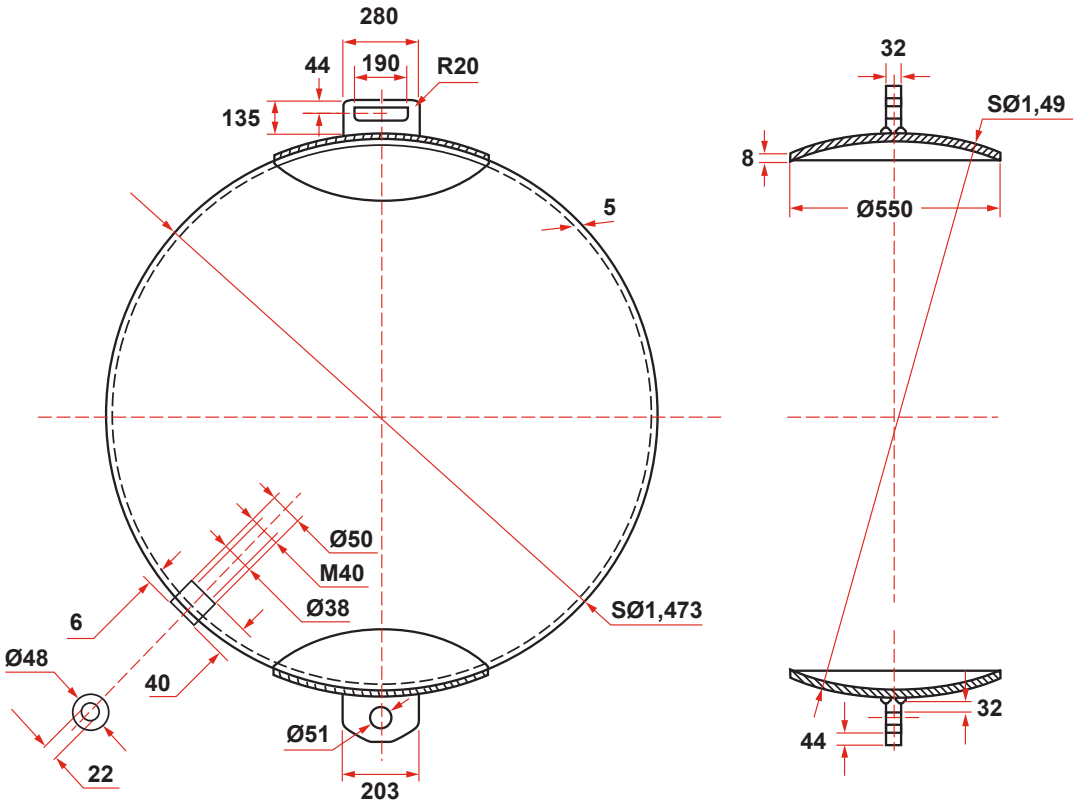

BUOYANCY: 3007 LBS.
WEIGHT: 679 LBS.
CAPACITY: 440 GAL

WATERMAN SUPPLY COMPANY
MARINE & INDUSTRIAL EQUIPMENT

P. O. Box 596 (90748) • 910 Mahar Ave., Wilmington, CA 90744
(800) 322-3131 • (310) 522-9698 • Fax: (310) 522-1043
E-Mail: sales@watermansupply.com
www.watermansupply.com
TradeNet ID 61935